DESCRIPTION: COAXIAL / SIGNAL - VERTICAL BOARD - MALE - MACHINED

UNITS = INCHES [MM]

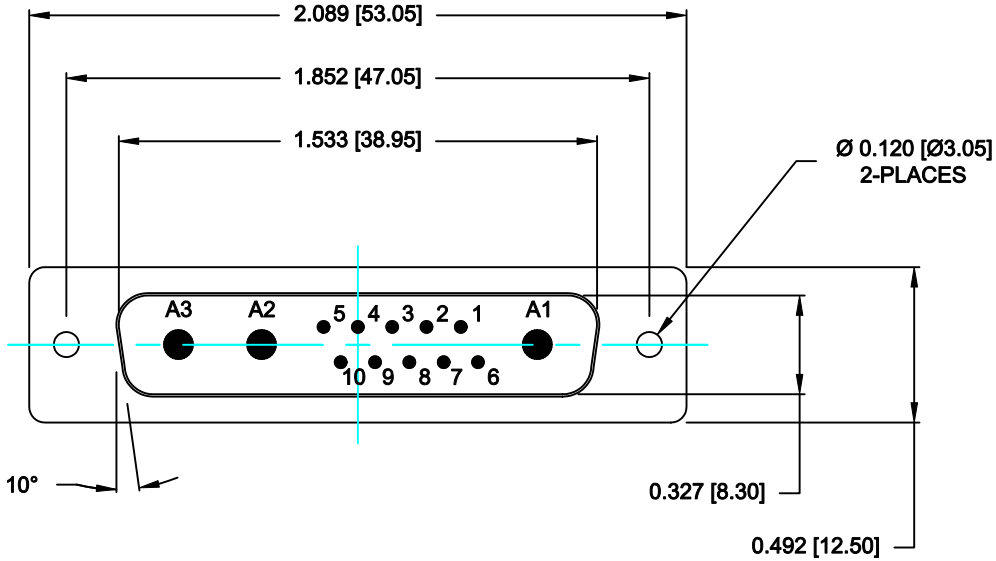

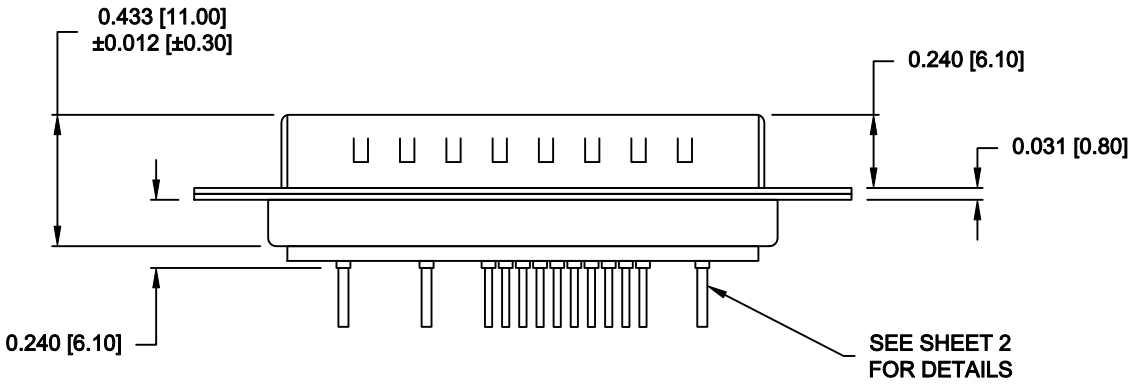

SPECIFICATIONS:

ELECTRICAL:

INSULATOR RESISTANCE:	5 GOHMS Min.
DIELECTRIC WITHSTANDING:	1,000VAC r.m.s.
OPERATING TEMPERATURE:	-55° C ~ +125° C
SIGNAL CONTACT RESISTANCE:	10 MilliOHMS Max.
COAXIAL CONTACT RESISTANCE:	2.7 MilliOHMS Max.
COAXIAL PINS:	50 OHM
SIGNAL CONTACT CURRENT RATING:	5 AMPS

MECHANICAL:

CONTACT INSERTION FORCE:	4.5 Kg Max.
CONTACT SEPARATOR FORCE:	0.3Kg Min.

MATERIALS:

CONTACTS:	BRASS
INSULATOR:	PBT UL94V-0 RATED, 230°C PROCESS TEMP.
SHELL:	STEEL

FINISH:

SHELL:	NICKEL
CONTACTS:	FULL GOLD FLASH

683M13W3103L001

00 = 50 OHM COAXIAL

RoHS COMPLIANT

THESE DRAWINGS AND SPECIFICATIONS ARE THE PROPERTY OF NorComp AND SHALL NOT BE REPRODUCED, COPIED OR USED AS THE BASIS FOR THE MANUFACTURE OF SALE OF APPARATUS WITHOUT WRITTEN PERMISSION.

NorComp

DRAWN: M. SIGMON		DATE: 03-13-15	
CHECKED:		DATE:	
SCALE: N.T.S.	SHEET 1 OF 2		REV 0
DWG NO. 683M13W3103L001			

DESCRIPTION: 683M SERIES CONTACTS

NOTE:
SIGNAL AND COAXIAL CONTACTS
COME PRE-LOADED INTO INSULATORS

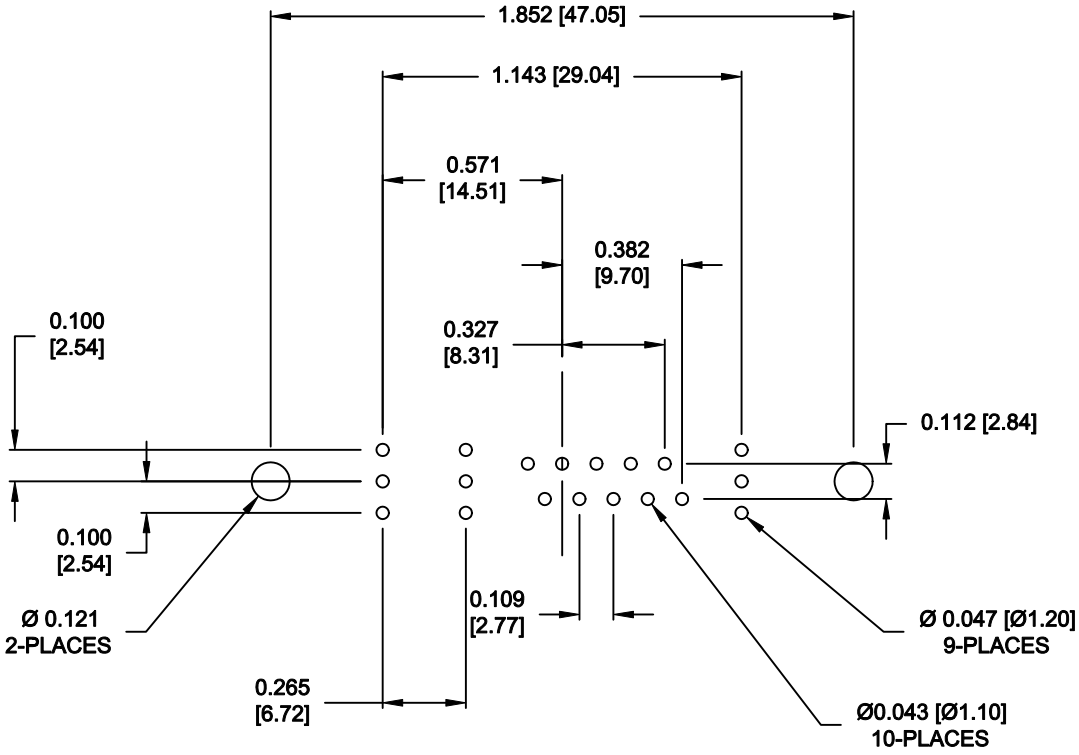

RECOMMENDED PCB LAYOUT

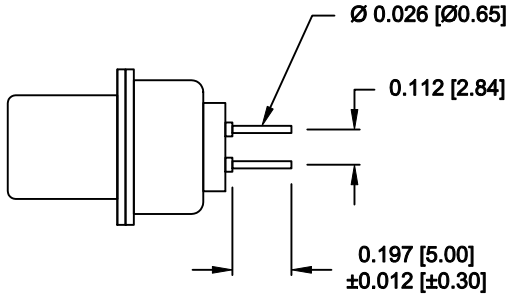

SIGNAL CONTACTS

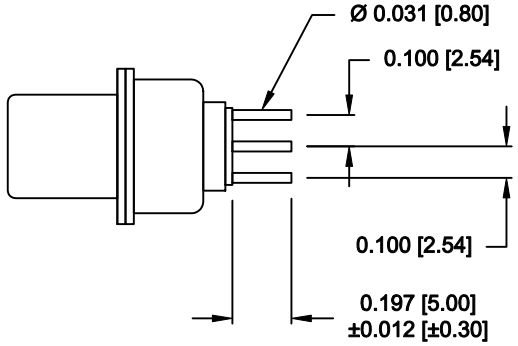

50 OHM COAXIAL CONTACT

RoHS COMPLIANT

THESE DRAWINGS AND SPECIFICATIONS ARE THE PROPERTY OF NorComp AND SHALL NOT BE REPRODUCED, COPIED OR USED AS THE BASIS FOR THE MANUFACTURE OF SALE OF APPARATUS WITHOUT WRITTEN PERMISSION.

NorComp

DRAWN: M. SIGMON		DATE: 03-13-15	
CHECKED:		DATE:	
SCALE: N.T.S.	SHEET 2 OF 2		REV 0
DWG NO. 683M13W3103L001			