DESCRIPTION: M12 FEMALE - RIGHT ANGLE - 6 POS.

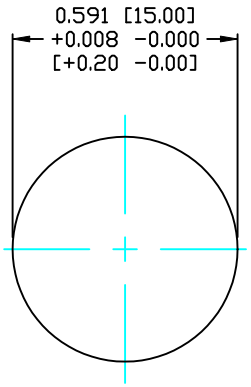

PANEL CUTOUT

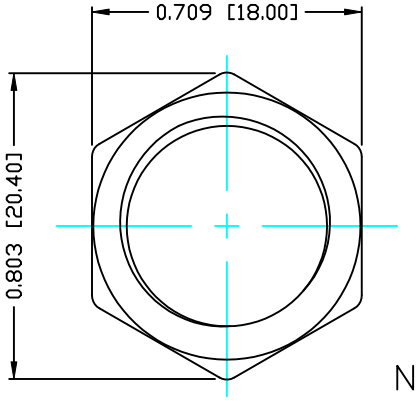

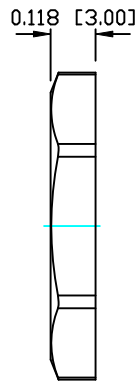

NUT

NOTE:

MATERIAL

HOUSING:	PBT UL94V-0, BLACK
CONTACT:	BRASS
NUT:	BRASS
O-RING:	EPDM, BLACK
BACK HOUSING:	PBT, UL94V-0, BLACK
DOWN HOUSING:	PBT, UL94V-0, BLACK

FINISH

CONTACT:	GOLD PLATED
UNDER PLATE:	NICKEL
SHELL:	STAIN NICKEL (80-100μ") OVER ALL

ELECTRICAL

RATED CURRENT:	3A
RATED VOLTAGE:	125V
INSULATION RESISTANCE:	100 mOhms MIN.
CONTACT RESISTANCE:	10 MOhms MAX.
WATER PROOF:	IP67

ENVIRONMENT

OPERATION TEMPERATURE:	-40°C TO +85°C

861-006-213R00Y

1 = GOLD FLASH
4 = 10u" GOLD

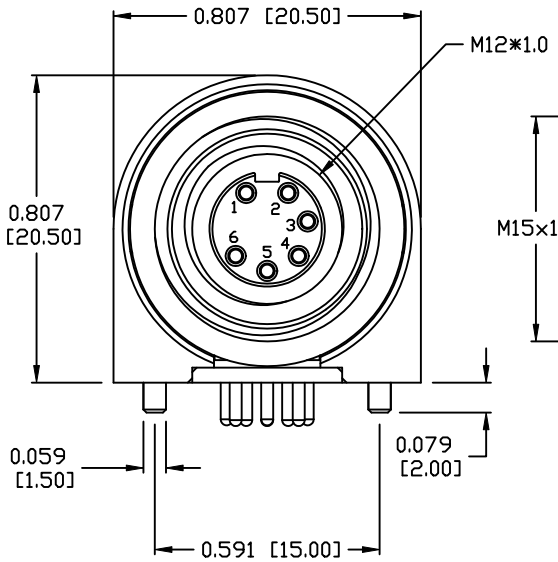

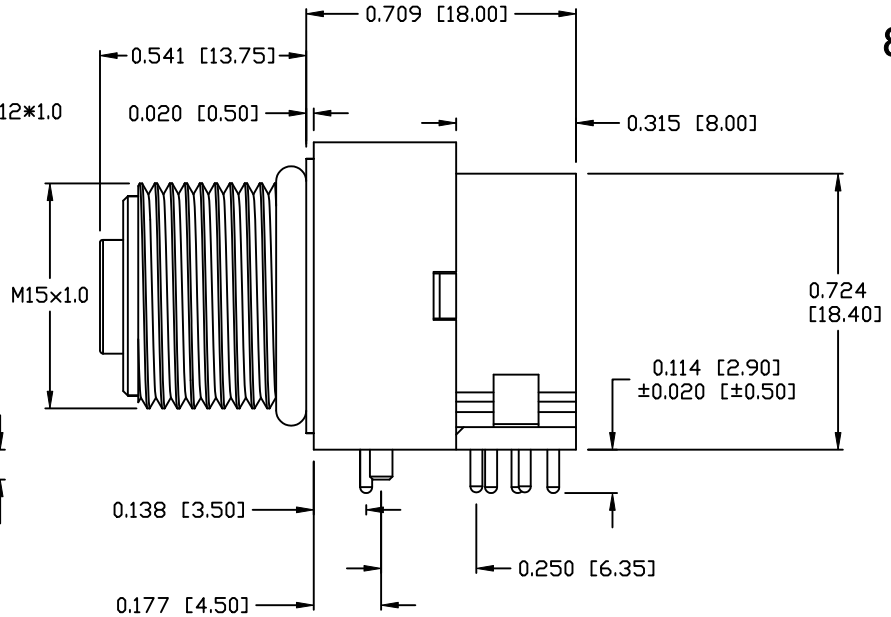

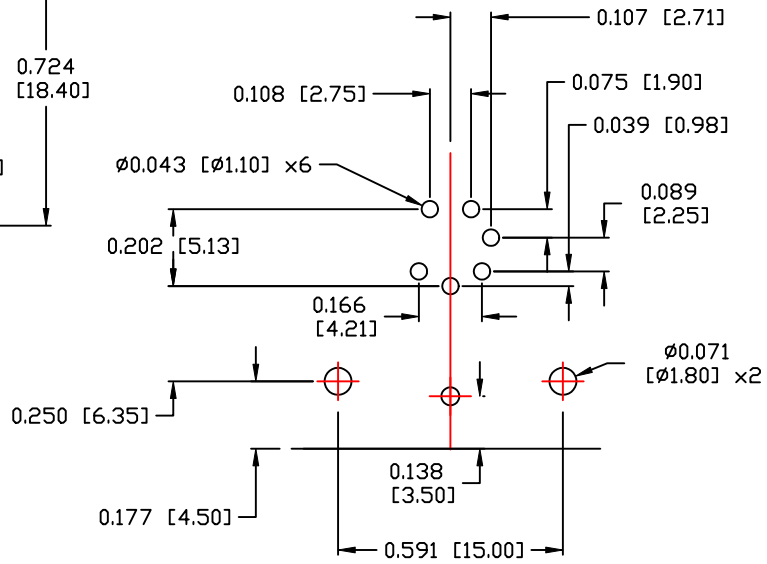

P.C.B LAYOUT

RoHS COMPLIANT DO NOT SCALE FROM DRAWING

THESE DRAWINGS AND SPECIFICATIONS ARE THE PROPERTY OF NorComp AND SHALL NOT BE REPRODUCED, COPIED OR USED AS THE BASIS FOR THE MANUFACTURE OR SALE OF APPARATUS WITHOUT WRITTEN PERMISSION.

DRAWN: M. SIGMON	DATE: 08-19-16	NorComp	SCALE: N.T.S.	SHEET 1 OF 1	REV 1
CHECKED:	DATE:		DWG NO. 861-006-213R00Y		